ISSN 2395-1621

Smart Shoes for Blind People

#1Akshay Gavandi, #2Suraj Tule, #3Nilam Tupe, #4Dayanand Gutte, #5Prashant Mane.

1akshay.gavandi1@gmail.com
2surajt0807@gamil.com
3nilamtupe12@gmail.com
4dayanand.gutte@gmail.com
5prashant.mane@zealeducation.com

#12345Department of Computer Engineering.
Zeal College Of Engineering and Research, Nahre, Pune.

ABSTRACT

The Smart Shoes are a novel device designed to help blind or visually impaired users navigate safely and quickly among obstacles and other hazards. During the operation, the user is supposed to be wearing the shoes. When the ping sensors from the Smart Shoes detect any obstacle, the embedded system will so inform to the Android system being used by the user. The user shall be able to actively interact with the application on the Android system, by the sole means being voice recognition. The Smart Shoes along with the application on the Android system shall help the user in moving around independently.

Keywords: Android, Smart Shoes, SP(Shortest Path), Graphical user interfaces (GUI),ODA.

ARTICLE INFO

Article History

Received: 2nd June 2017

Received in revised form :

2nd June 2017

Accepted: 5th June 2017

Published online :

6th June 2017

I. INTRODUCTION

The Smart Shoes are a novel device designed to help blind or visually impaired users navigate safely and quickly among obstacles and other hazards. During the operation, the user is supposed to be wearing the shoes. When the ping sensors from the Smart Shoes detect any obstacle, the embedded system will so inform to the Android system being used by the user. The user shall be able to actively interact with the application on the Android system, by the sole means being voice recognition. The Smart Shoes along with the application on the Android system shall help the user in moving around independently. An estimated 15 million people in India are fully or partially visually disabled. Visual impairment makes it very difficult to the people to move around by themselves freely without any external support from another person or guide dogs. The cane is a widely used tool to help the disabled remain mobile in an independent way. However the cane requires that the person be

trained in using the cane which can take up to a 100 hours. Here we put forward an innovative device known as the Smart Shoes. A normal looking and usable pair of shoes are embedded with ping sensors and obstacle sensors interfaced with an Arduino Nano board, for real time obstacle detection. The user shall be able to use the application on Android system using only the hardcoded keys and speech. The user can actively input his source to destination path to the Google Maps service within the application using speech. The application will help him navigate and guide him from source to destination using speech and help him avoid obstacles in his path. This in turn will help the disabled person traverse freely in an independent manner.

II. ALGORITHM DETAILS

1.] Dijkstras Shortest Path Algorithm used by Google Maps:

function Dijkstra(Graph, source):
1. create vertex set Q
2. for each vertex v in Graph: // Initialization
3. ist[v] INFINITY // Unknown distance from source to v
4. prev[v] UNDEFINED // Previous node in optimal path from source
5. add v to Q// All nodes initially in Q (unvisited nodes)
6. dist[source] 0 // Distance from source to source
7. whileQ is not empty:
8. u vertex in Q with min dist[u] // Node with the least distance will be selected _rst
9. remove u from Q
10. for each neighbor v of u: // where v is still in Q.
11. alt dist[u] + length(u, v)
12. if alt< dist[v]: // A shorter path to v has been found
13. dist[v] alt
14. prev[v] u
15. return dist[], prev[]

2.] Obstacle detection algorithm:

1. Start
2. Read users destination input.
3. Pass the input to Google Maps api.
4. Start the navigation.
5. If ping returns true then
6. Calculate the distance of obstacle
7. Return the obstacle detection on front with distance as voice
8. If IR sensor returns true
9. Return obstacle detection on left/right as voice
10. Repeat 5-6 till app is running
11. Stop

III. SYSTEM ARCHITECTURE

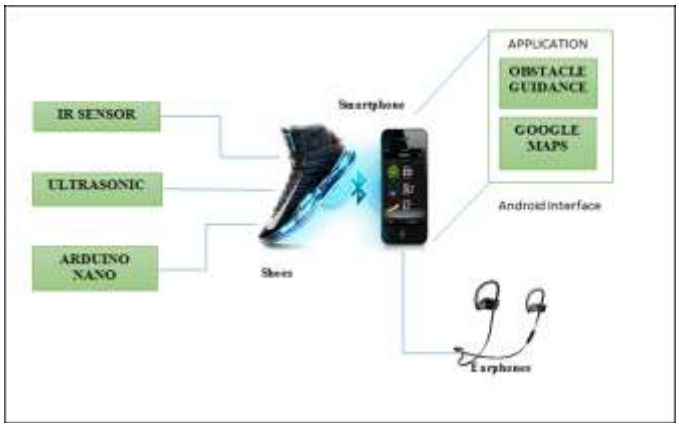

Firstly all IR sensors located on left side of left shoe and right side of right shoe and ping ultrasonic sensor located at the front of both shoe senses the environmental data and passes the data through transmitter to the receiver of right shoe. the data collected by the right shoe and the data transferred from the left shoe both are collected together and stored in aurduino nano chip. The end user gives his/her destination address through the earphones to the android system. Then the command passes to the GPS chip, then the GPS chip locate the destination path on the Google map. Then the Google map gives the directions information. All data is then transfer to android device through Bluetooth HOCS..Then the android device does the processing of the data and if it founds any obstacle in between the path then it converts the text data to voice data and passes the obstacle information in voice format to end user through earphones.

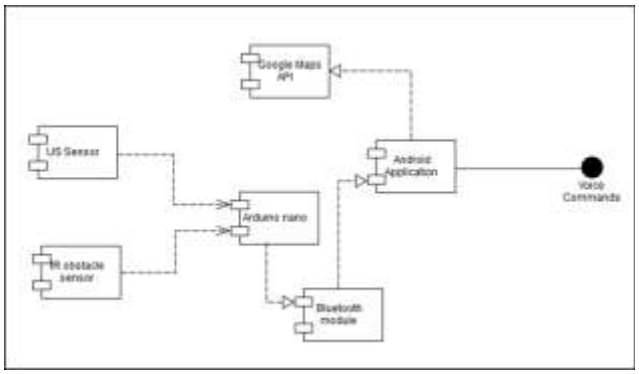

US and IR Sensors: Role of these components is to detect oncoming obstacles.

Arduino nano: This component is used to embed the sensors and Bluetooth module on it.

Bluetooth module: It is used to communicate the data received at arduino to the smartphone.

Android Application: This component aggregates all the incoming data and generates necessary output

Google Maps: This API is called by the android app to run in the background.

IV. IMPLEMENTATION

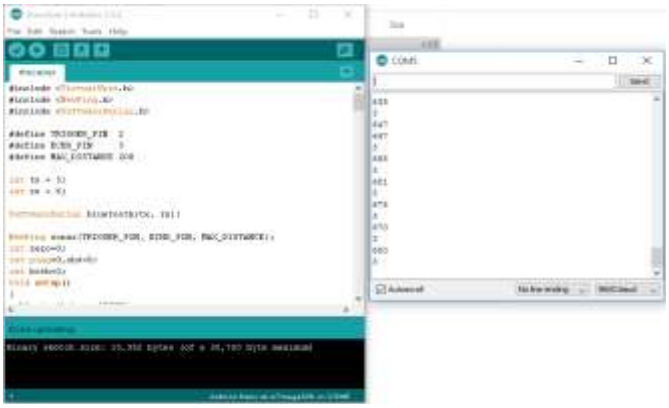

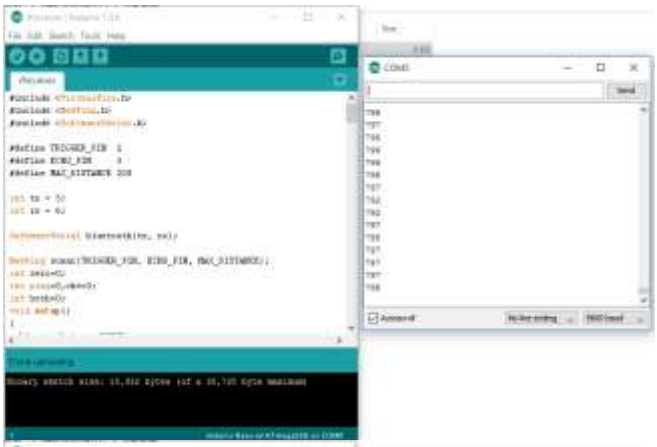

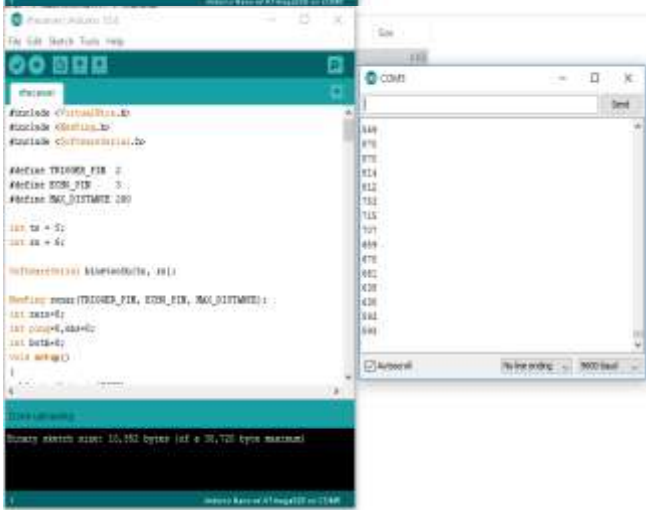

V. CONCLUSIONS

After studying the results of various approaches described various papers, we propose smart shoes for obstacle detection and navigation by visually impaired people. The smart shoes are acquired with Arduino, which is a type of embedded system. Rather than having a complex system which is non-portable, embedded system deals with all the functions which a user wants to perform at that instance. The processing of data will be done dynamically as the user walks with the sensors activated. The processing of the values will be communicated from the sensors to the Arduino board and the through the interfacing hub to the smartphone. This, the complexity and the time will be low and the obstacle and be detected in fraction of seconds. The proposed system will automate according to the real time path-ways and the obstacles coming in between. Obstacles will be processed by the given algorithm programmed into Arduino as well as the communication will be initiated as per the Android interfacing Algorithm. The sensors will sense the obstacle and will give out the values, thus measuring the distance of the obstacle from the sensors. Depending on the values given by the sensors the arduino will process the values for simplicity and through interfacing device will be passed to the Android smart phone. Once the values are received, with the text-to-speech algorithm, user would be able to hear the distance from the current position. However, this process works with no internet connection for better usability of the user. For navigation purposes an API is used to run a Google maps application in the background at the same time when the shoes detect the obstacles. Hence, a visually impaired person can sense, feel, listen and walk with the ease of use and faster response time with the environment around him with the help of these Smart.

REFERENCES

[1] A. Discant, A. Rogozan, C. Rusu and A. Bensrhair, "Sensors for Obstacle Detection - A Survey," 2007 30th International Spring Seminar on Electronics Technology (ISSE), Cluj-Napoca, 2007, pp. 100-105.

[2] Mustapha, Baharuddin, Aladin Zayegh, and Rezaul K. Begg. "Ultrasonic and infrared sensors performance in a wireless obstacle detection system." Arti_cial Intelligence, Modelling and Simulation (AIMS), 2013 1st International Conference on. IEEE, 2013.

[3] Mustapha, B. A. Zayegh, and R. K. Begg. "Wireless obstacle detection system for the elderly and visually impaired people." Smart Instrumentation, Measurement and Applications (ICSIMA), 2013 IEEE International Conference on. IEEE, 2013.

[4] C. K. Lakde and P. S. Prasad, "Navigation system for visually impaired people," Computation of Power, Energy Information and Commuincation (ICCPEIC), 2015 International Conference on, Chennai, 2015, pp. 0093-0098. doi: 10.1109/ICCPE- IC.2015.7259447

[5] Bousbia-Salah, M., Redjati, A., Fezari, M.Bettayeb, M. (2007, November). An ultrasonic navigation system for blind people. In Signal Processing and Communications, 2007. ICSPC 2007. IEEE International Conference on (pp. 1003-1006). IEEE.

[6] Hee Chang Moon , Hong Chul Lee and Jung Ha Kim. Obstacle Detecting System of Unmanned Ground Vehicle. In SICE-ICASE, 2006. International Joint Conference

[7] Jay Chen, Karric Kwong, Dennis Chang, Jerry Luk, Ruzena Bajcsy. Wearable Sensors for Reliable Fall Detection.In Engineering in Medicine and Biology Society, 2005. IEEE-EMBS 2005. 27th Annual International Conference.

[8] K. Doughty, R. Lewis, and A. McIntosh, The design of a practical and reliable fall detector for community and institutional telecare, J.Telemed. Telecare 2000, 6 S150-4.

[9] Elke Mackensen, Walter Kuntz, Claas Muller. Smart Wireless Autonomous Microsystems (SWAMs) for Sensor Actuator Networks. In Sensors for Industry Conference, 2004. Proceedings the ISA/IEEE

